BLIZ OVAL

Performance Lighting





Fixture shown with vertical signage



Fixture shown with horizonal signage

DISCONTINUED

Wall mount series. Fixtures consist of:

- Multi-step powder-coat painting process, optimized against UV rays and corrosion.
- Copper-free precision die-cast aluminum housing and ring/faceplate.
- High transmittance, internally coated, pressed glass diffuser, thermally, and chemically quenched to strengthen the impact resistance and reduce the effect of rapid temperature changes.
- Custom molded, anti-aging gasket(s).
- Stainless steel external hardware.
- Custom MCPCB utilized to maximize heat dissipation and promote long LED life.
- 100% uniform diffused light emission.
- Input voltage: 120-277 V (50/60 Hz), integral 0-10 V dimming driver.
- The luminaire may be configured with numerous options and multiple standard finishes. Not all options are available in all configurations. Consult factory for more information about specification sheet details.
- 5-year warranty.

IP 65 | WET | cULus LISTED | 1-10 V | RAL

FINISHES

- **AN-96** / Iron gray / Textured
- **GR-94** / Aluminum metallic / Textured
- **WH-87** / White / Textured
- **BK-81** / Black / Textured
- **RB-10** / Iron rust / Textured

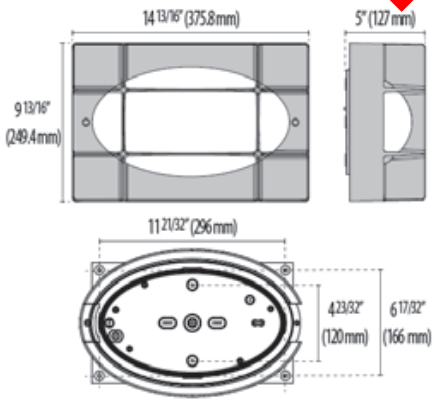

BLIZ OVAL

Lumen Output	3K	4K
BLIZ OVAL 24W	2111	2131

Scan here for installation Instructions

Order Guide - Bliz Oval

Order code example **BO-24W-3K-AM-UNV-010V-VSIGN**

Series	Wattage	CCT	Finish	Voltage	Dimming	Options/ Accessories
BO Bliz Oval	**24W** 24 watt (min) **XX** Specify wattage Must be below max	80 CRI std. **27K** 2700K **3K** 3000K **35K** 3500K **4K** 4000K	**AM** Aluminum metallic **IG** Iron gray **IR** Iron rust **BK** Textured black **WH** Textured white **CC** Custom color	**UNV** 120-277V	**010V** 0-10V dimming driver **ELV** 120V Line-voltage dimming driver *For more options contact factory*	**VSIGN** Vertical signage **HSIGN** Horizontal signage **REM** Remote emergency battery back-up **TP** Tamper proof hardware

DISCONTINUED

CONSULT FACTORY FOR OTHER AVAILABLE OPTIONS NOT SHOWN ABOVE
NOTE: TEMPLATE AND ANCHOR BOLTS INCLUDED WITH FIXTURE